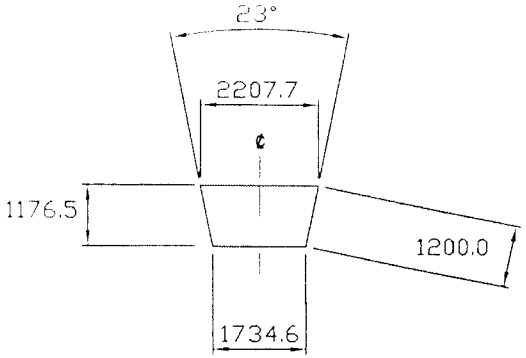

DETAIL OF 'CURVE' PANEL

DETAIL OF STRAIGHT PANEL

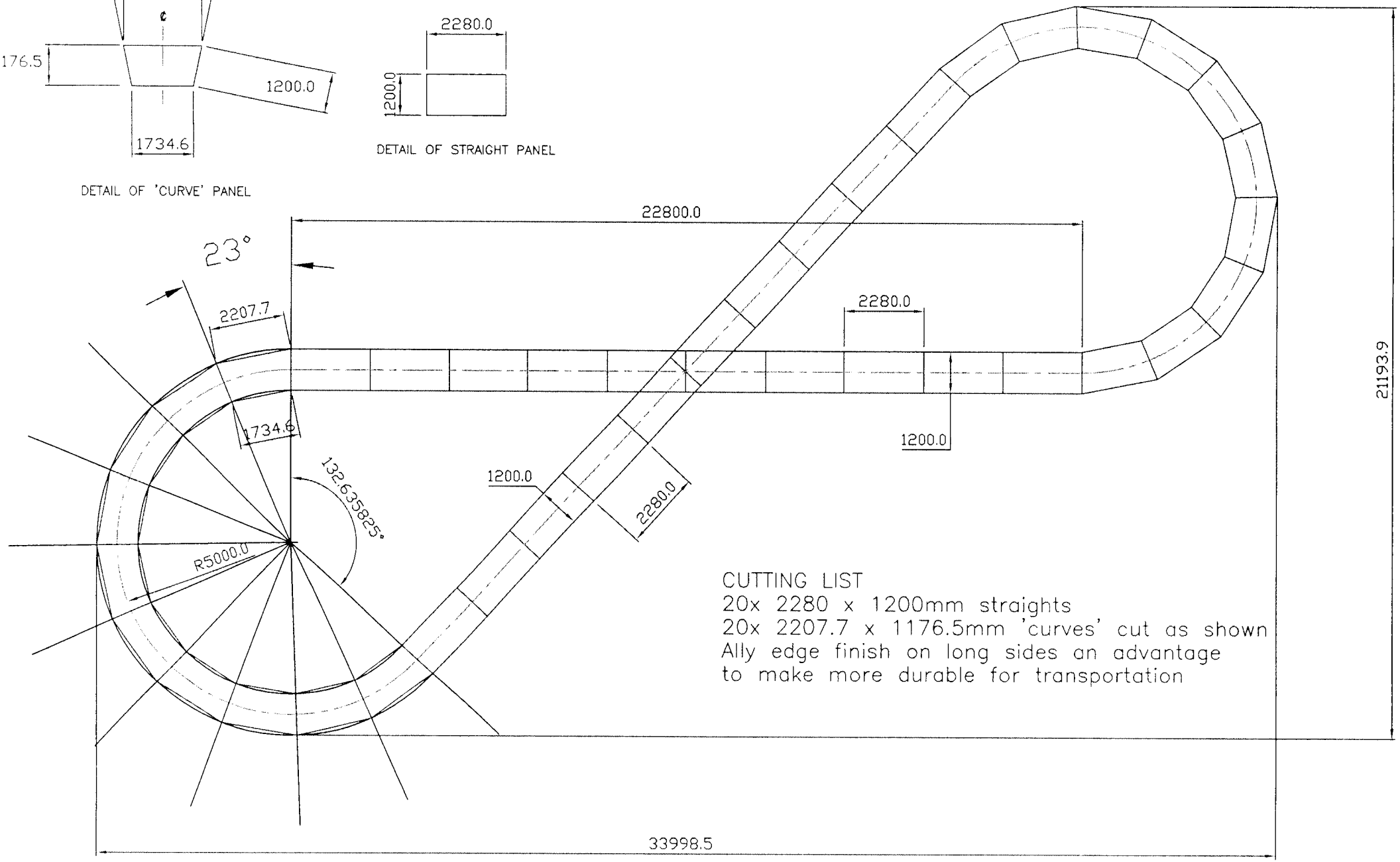

CUTTING LIST
20x 2280 x 1200mm straights
20x 2207.7 x 1176.5mm 'curves' cut as shown
Ally edge finish on long sides an advantage
to make more durable for transportation